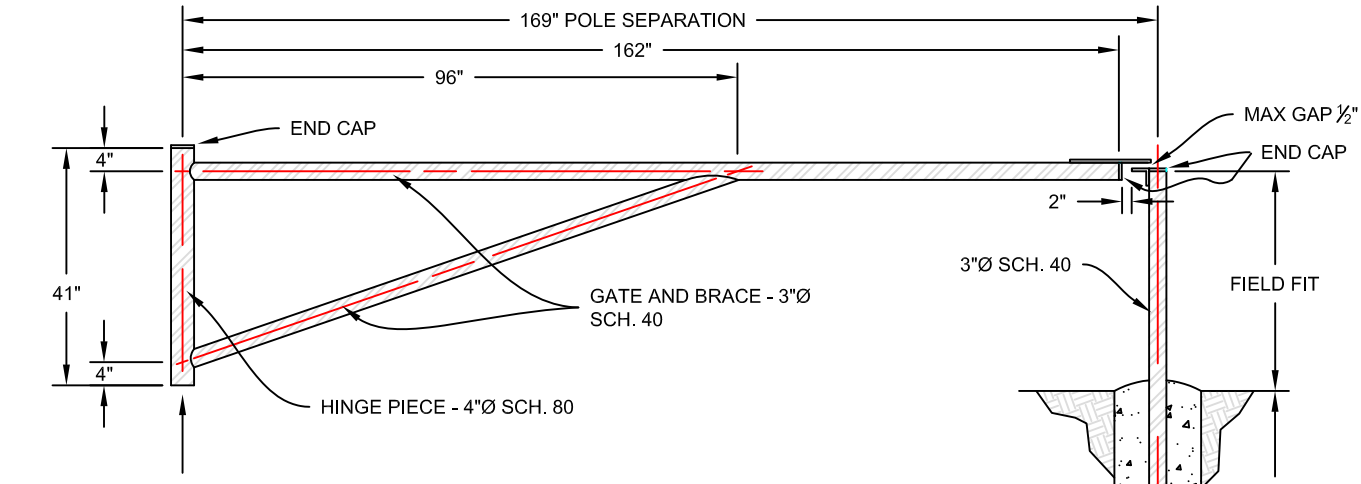

LOCK POST

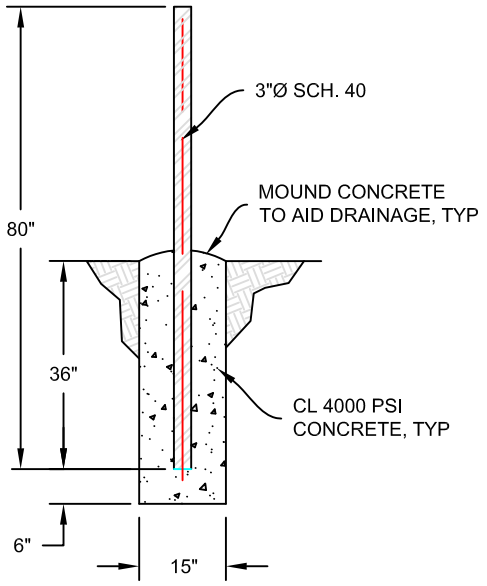

HINGE POST

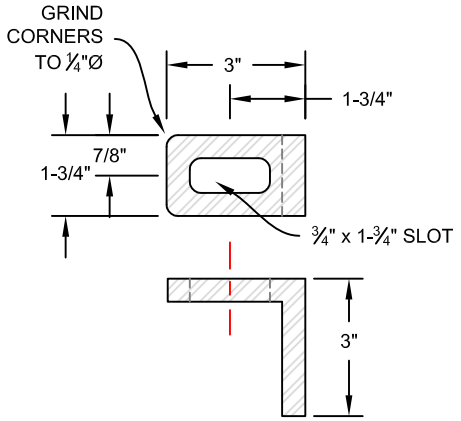

POST LOCK PLATE DETAIL

L 3x3x½" A36 ANGLE

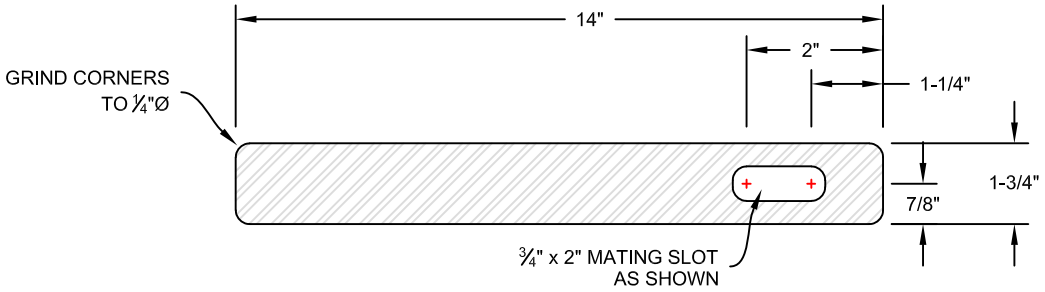

GATE LOCK BAR DETAIL

½" A36 FLATBAR

FABRICATION NOTES:

1. **ALL WELDED CONNECTIONS SHALL BE 3/16" CONTINUOUS FILLET WELDS, GROUND SMOOTH AS NECESSARY.**
2. **ALL SHARP OR ROUGH EDGES SHALL BE GROUND SMOOTH. GRIND CORNERS TO ¼" ± RADIUS**
3. **GATE AND POSTS SHALL BE CLEANED OF ALL RUST AND CONTAMINANTS AND PAINTED WITH NEW CAT YELLOW OR APPROVED EQUIVALENT.**
4. **ALL END CAPS SHALL BE ½" A36 GRADE B MS.**

CDID #1 CONSOLIDATED DIKING IMPROVEMENT DISTRICT NO. 1

REV	ISSUE	DWG	DES	CHK	APP
8/2020	update standard	TC	KC	ANB	ANB

ACCESS GATE
STANDARD INSTALLATION DETAIL

DATE: AUG 2020
DESIGN: KC
DRAWN: TC

DRAWING NO.
C-1
1 of 1